MODEL NO.	PACKAGING
134-1000-002	ONE PCS PER BAG

REV	ECO	DATE
001	ECO-17-0032	11/28/2017

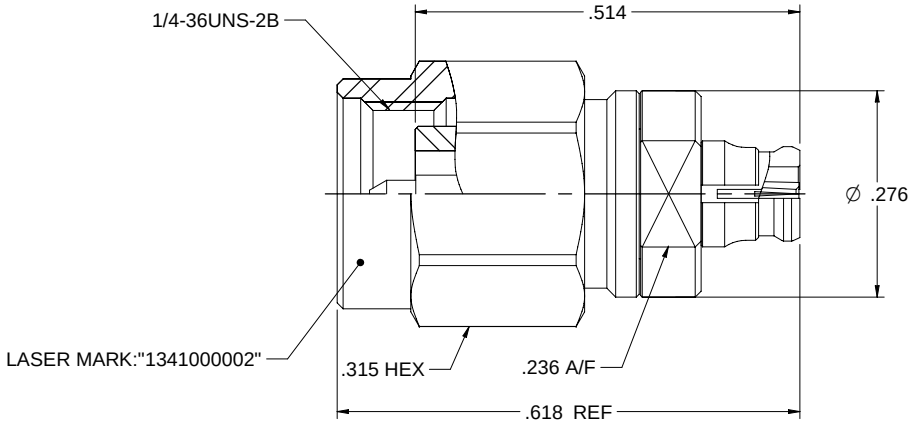

NOTES: UNLESS OTHERWISE SPECIFIED

1. MATERIAL & FINISH:
   1.1 BODY & SHELL: PASSIVATED STAINLESS STEEL
   1.2 RING, CONTACT PIN & CONTACT BODY : GOLD PLATED BERYLLIUM COPPER
   1.3 INSULATOR: PEEK NATURAL
   1.4 C RING: BERYLLIUM COPPER
   1.5 GASKET: SILICONE RED

2. ELECTRICAL:
   2.1 IMPEDANCE: 50 OHMS
   2.2 FREQUENCY RANGE: 0-40 GHz
   2.3 VOLTAGE STANDING WAVE RATIO: 1.25 MAX
   2.4 DIELECTRIC WITHSTADING VOLTAGE: 500 VRMS MIN
   2.5 CONTACT RESISTANCE:
      2.5.1 CENER CONTACT: 6 MILLIOHM MAX
      2.5.2 OUTER CONTACT: 2 MILLIOHM MAX
   2.6 INSULATOR RESISTANCE: 5000 MEGOHM MIN

3. MECHANICAL:
   3.1 ENGAGEMENT FORCE: FULL DETENT 68 N MAX, LIMITED DETENT 45 N MAX, SMOOTH BORE 9 N MAX (SMP)
   0.23 NM MAX (SMK)
   3.2 DISENGAGEMENT FORCE: FULL DETENT 22 N MIN, LIMITED DETENT 9 N MIN, SMOOTH BORE 2.2 N MIN (SMP)
   0.23 NM MAX (SMK)
   3.3 COUPLING NUT RETENTION: 267 N MIN
   3.4 COUPLING PROOF TORQUE: 1.7 NM MIN
   3.5 CONTACT RETENTION: 22 N MIN
   3.6 DURABILITY: 500 CYCLES MIN (SMK)
   FULL DETENT 100 CYCLES MIN, LIMITED DETENT 500 CYCLES MIN, SMOOTH BORE 1000 CYCLES MIN (SMP)

4. ENVIRONMENT:
   4.1 THERMAL SHOCK: MIL-STD-202, METHOD 107, CONDITION B.
   4.2 OPERATING TEMPERATURE: -55TO 125°C
   4.3 SALT SPRAY: MIL-STD-202, METHOD 101, CONDITION B
   4.4 SHOCK: MIL-STD-202, METHOD 213, CONDITION I
   4.5 VIBRATION: MIL-STD-202, METHOD 204, CONDITION D
   4.6 MOISTURE RESISTANCE: MIL-STD-202, METHOD 106

cinch connectivity solutions	Model No. 134-1000-002		Johnson
	RoHS2 ☑ 2011/65/EU	Cage Code	Title: ADAPTER ASSEMBLY,SMK(2.92mm) PLUG TO SMP JACK
This PROPRIETARY Document is the property of Cinch Connectivity Solutions. It is confidential in nature and must not be shared with the direct competitors of Cinch or used in a manner outside authorized business relationships without upon demand. INTERNET DRAWINGS IN ACCORDANCE WITH ASME Y14.5-2009	UNLESS OTHERWISE SPECIFIED .XXX ±.02 .XXXX ±.01 ANGLES ±5°	3RD ANGLE PROJECTION Drawn By: Betty.Yu Date: 10/10/2017	Drawing No. 134-1000-002 Rev. 001
		Size C DO NOT SCALE DRAWING	Workmanship Std NONE Sheet 1 of 1