MICRO SWITCH
a Honeywell Division
FED. MFG. CODE 91929

BRIDGE PRESSURE SENSOR

CATALOG LISTING
236PC SERIES CHART 2

THIS DRAWING COVERS A PROPRIETARY ITEM AND IS THE PROPERTY OF MICRO SWITCH, A DIVISION OF HONEYWELL. THIS DRAWING IS NOT TO BE COPIED OR USED WITHOUT THE APPROVAL OF MICRO SWITCH

CATALOG LISTING
(B)
236PC100GW
236PC150GW

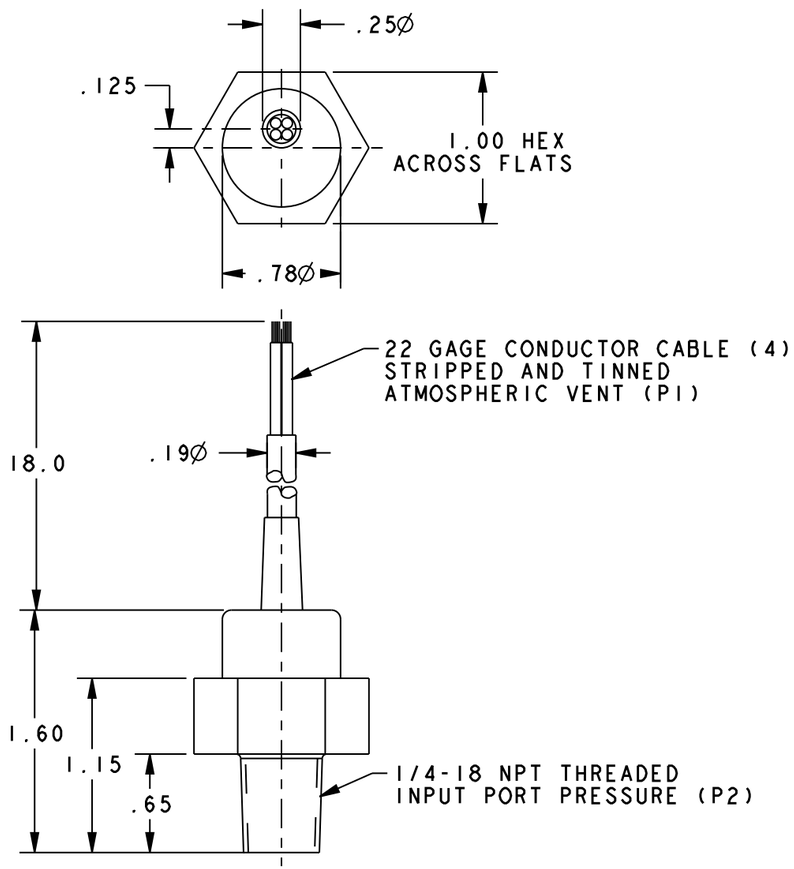

GENERAL OPERATING CHARACTERISTICS
(ELECTRICAL PERFORMANCE AT 10.0 ±0.01 VDC EXCITATION, 25°C)

PARAMETERS	PRESSURE RANGES (PSI)	MIN	TYP	MAX	UNITS
NULL OFFSET	ALL	-2	0	+2	MV
NULL SHIFT △2 △ 0° < 25°C > 50°			±3.0		
SPAN △1 △	0 TO 60G	58	60	62	
	0 TO 100G	98	100	102	
	0 TO 150G	58	60	62	
SENSITIVITY PER PSI	0 TO 60G		1.00		MV/PSI
	0 TO 100G		1.00		
	0 TO 150G		1.00		
SENSITIVITY SHIFT △2 △ 0° < 25°C > 50° AT 10 VDC	ALL		±1.5		% SPAN
LINEARITY (P2 > P1)	0 TO 60G			±0.50	
	0 TO 100G			±0.50	
(BFSL)	0 TO 150G			±0.50	
REPEATABILITY & HYSTERISIS	ALL		±0.25		
STABILITY OVER 1 YEAR			±1.5		
EXCITATION VOLTAGE			10	16	VDC
INPUT RESISTANCE			6.8K		OHMS
OVERPRESSURE (P2 > P1)	0 TO 60G			100	PSI
	0 TO 100G			150	
	0 TO 150G			225	
TEMPERATURE					
STORAGE	ALL	-40° TO +105°C		(-40° TO +221°F)	
OPERATE		-30° TO +70°C		(-22° TO +158°F)	
COMPENSATED		0° TO +50°C		(+32° TO +122°F)	

CIRCUIT DIAGRAM

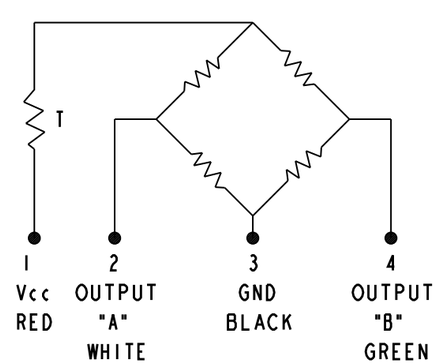

OUTPUT "A"
INCREASES AS INPUT
PRESSURE INCREASES

OUPUT "B"
DECREASES AS INPUT
PRESSURE DECREASES

NOTES

△1 SPAN IS THE ALGEBRAIC DIFFERENCE BETWEEN END POINTS (OUTPUT AT MINIMUM AND MAXIMUM PRESSURE)

△2 TEMPERATURE ERROR IS CALCULATED WITH RESPECT TO 25°C AND EXPRESSES THE DEVIATION THAT COULD OCCUR AS TEMPERATURE IS RAISED OR LOWERED TO LIMITS INDICATED

3 PRESSURE MEDIUM CAN BE LIQUID OR GASEOUS, SO LONG AS IT DOES NOT REACT WITH SILICON, GLASS, 300 SERIES STAINLESS STEEL OR URETHANE BASED EPOXY

THIRD ANGLE PROJECTION

SCALE FULL

DO NOT SCALE PRINT

UNLESS OTHERWISE SPECIFIED TOLERANCES ARE

ONE PLACE	(.0)	±.030
TWO PLACE	(.00)	±.015
THREE PLACE	(.000)	±.005
ANGLES		±

WEIGHT 2 OZ

ANSI Y14.5M-1982 APPLIES

CATALOG LISTING 236PC SERIES CHART 2
PAGE 1 OF 1
RELEASE NO. PR-12997
REPLACES -
ISSUE 8
REVISIONS
A 206541 GLH 20CT02
B 0063733 NR 27APR10
PTC/CAD 2D
DRAWN GLH 20CT02
CHECK RS 27 APR 10
CHECK 20CT02
CHECK SAV 20CT02