THIS DRAWING IS UNPUBLISHED. RELEASED FOR PUBLICATION
© COPYRIGHT BY TYCO ELECTRONICS CORPORATION, ALL RIGHTS RESERVED.

LOC	DIST
DS	–

REVISIONS

P	LTR	DESCRIPTION	DATE	DWN	APVD
	F1	REVISED (ECR-09-019350)	31.AUG.'09	KT	HG
	G	REVISED (ECR-10-014220)	11.AUG.'10	SJ	HG
	G1	REVISED (ECR-12-019821)	15.NOV.'12	JM	HG

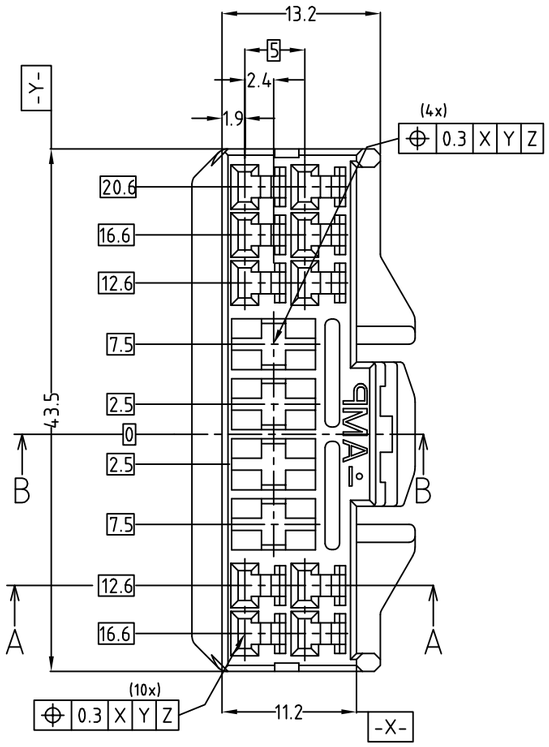

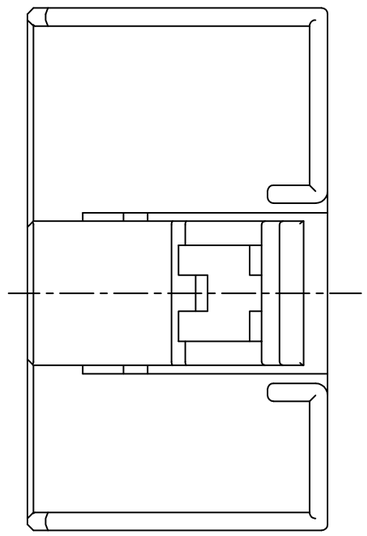

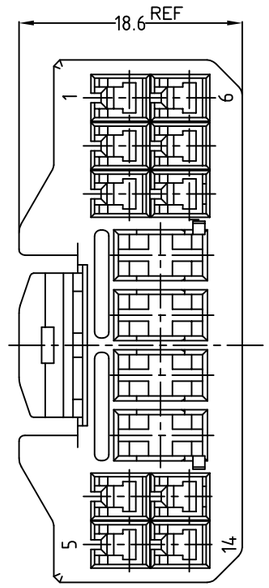

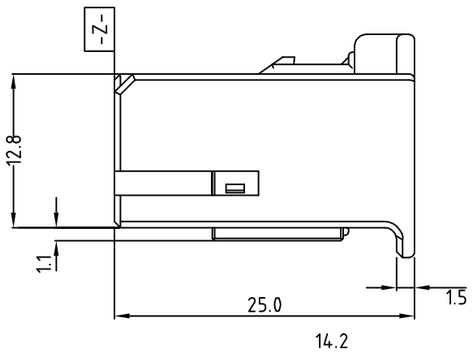

삽입방향

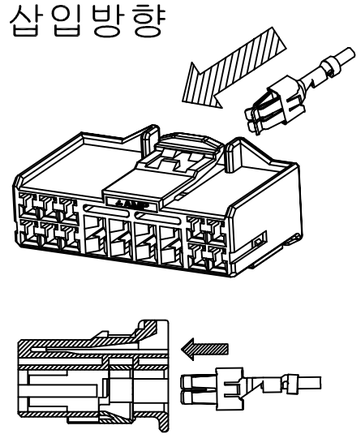

NOTE
1. APPLIED CONTACT P/N;
   090 II- 368083, 368084, 368085
   090 III- 1743654, 1743655, 1743656
   S.P.T.- 927840-2,927831-2,927827-2,927829-2,964203-1,964204-1
2. APPLICABLE PRODUCT SPEC NO. ; 108-61046

-주기-
1. 적용단자 P/N. ; 090 II - 368083, 368084, 368085
   090 III - 1743654, 1743655, 1743656
   S.P.T. - 927840-2, 927831-2, 927827-2, 927829-2, 964203-1, 964204-1
2. 적용제품 규격서 ; 108-61046

NO.	COLOR	MATERIAL	DESCRIPTION	QT'Y			
				ASS'Y P/N	368451-1	368451-3	368451-4	368451-8
2	NATURAL	PBT	.090/.250 HYB 14P DBL	1	1	1	1
1	BLUE	PBT	.090/.250 HYB 14P PLUG				1
	BROWN	PBT	.090/.250 HYB 14P PLUG			1	
	GRAY	PBT	.090/.250 HYB 14P PLUG		1		
	NATURAL	PBT	.090/.250 HYB 14P PLUG	1			

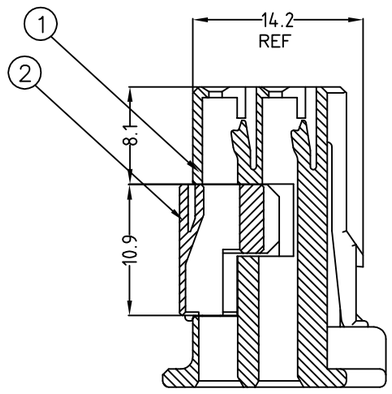

A-A

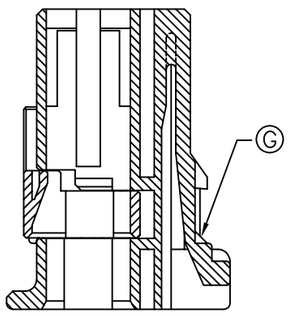

B-B

THIS DRAWING IS A CONTROLLED DOCUMENT FOR TYCO ELECTRONICS CORPORATION IT IS SUBJECT TO CHANGE AND THE CONTROLLING ENGINEERING ORGANIZATION SHOULD BE CONTACTED FOR THE LATEST REVISION.

DIMENSIONS: MM

TOLERANCES UNLESS OTHERWISE SPECIFIED:
0 <XX<10 ± 0.2
10<XX<30 ± 0.25
30<XX ± 0.3
ANGLES ± 3°

MATERIAL: SEE TABLE

FINISH:

DWN: JM JEON
CHK: JW JUNG
APVD: HG CHO
PRODUCT SPEC: –
APPLICATION SPEC: –
WEIGHT: –

TE Connectivity

NAME: .090/.250 HYBRID 14P PLUG ASSEMBLY

SIZE	CAGE CODE	DRAWING NO	RESTRICTED TO
A3	00779	C-368451	–

CUSTOMER DRAWING | SCALE 2/1 | SHEET 1 OF 1 | REV G1