THIS DRAWING IS UNPUBLISHED. RELEASED FOR PUBLICATION -,- .
© COPYRIGHT - BY TYCO ELECTRONICS CORPORATION. ALL RIGHTS RESERVED.

| LOC | DIST |
|---|---|
| AD | 00 |

REVISIONS

| P | LTR | DESCRIPTION | DATE | DWN | APVD |
|---|---|---|---|---|---|
| | C | REVISED PER ECO-11-000045 | 05JAN11 | DH | DY |

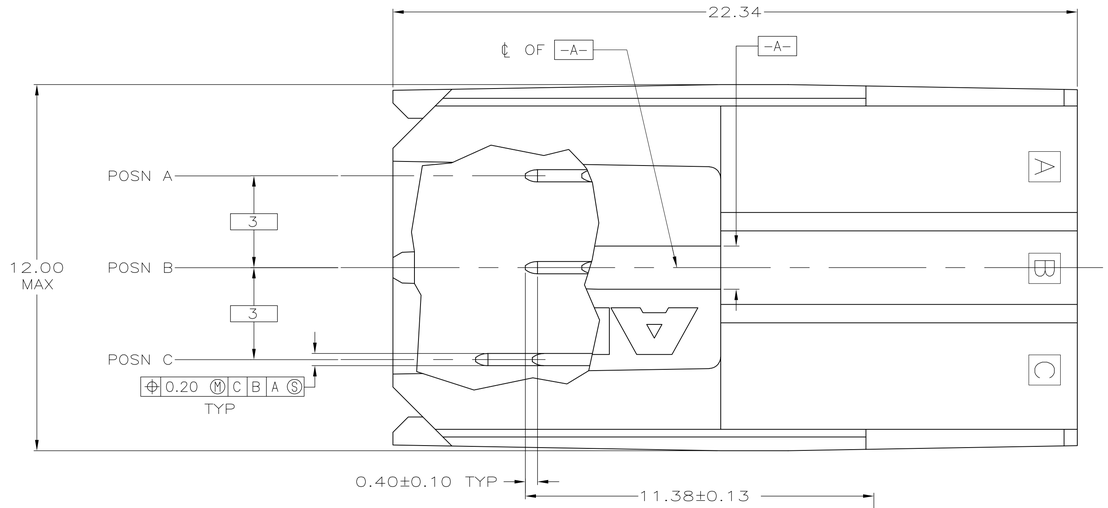


1. MATERIAL: HOUSING: POLYESTER. COLOR: GRAY. UL 94V-0.
   CONTACT: PHOSPHOR BRONZE.
2. FINISH: CONTACT MATING AREA: 1.27μm MIN GOLD OR 0.08μm MIN GOLD OVER 0.76μm MIN PALLADIUM-NICKEL.
   ACTION PIN AREA: 0.5μm MIN TIN PLATE,
   ALL OVER 1.27μm MIN NICKEL UNDERPLATE.
3. FINISH: CONTACT LUBRICATION WITH BELLCORE APPROVED LUBRICANT. TECHNICAL REFERENCE: TR-NWT-001217 ISSUE 1, SEPT 1992.
4. REFERENCE APPLICATION SPEC 114-1103 FOR RECOMMENDED PLATED THRU HOLE DIAMETER AND PLATING THICKNESS.
5. CURRENT RATING 10A/CONTACT PER PRODUCT SPEC 108-1651.

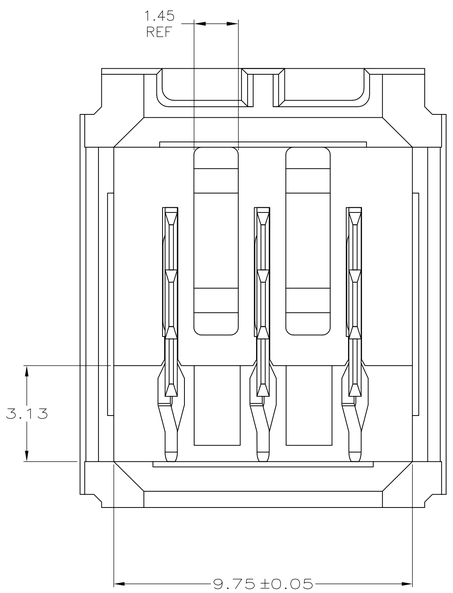


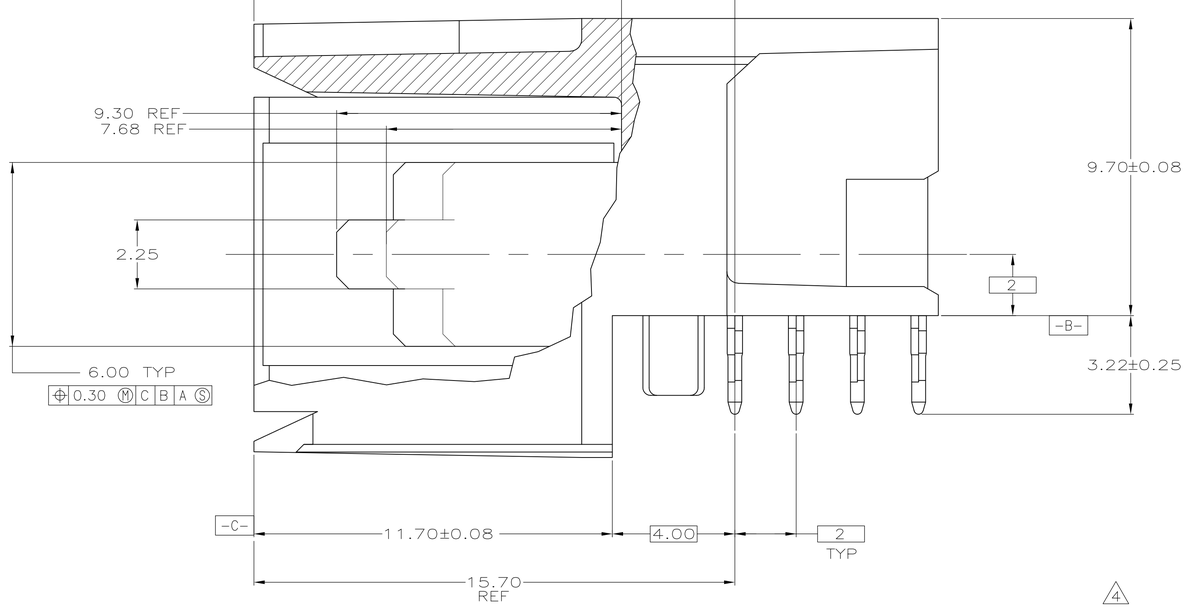


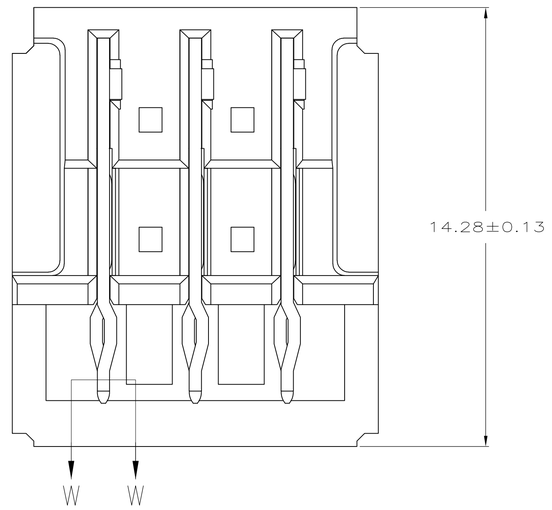


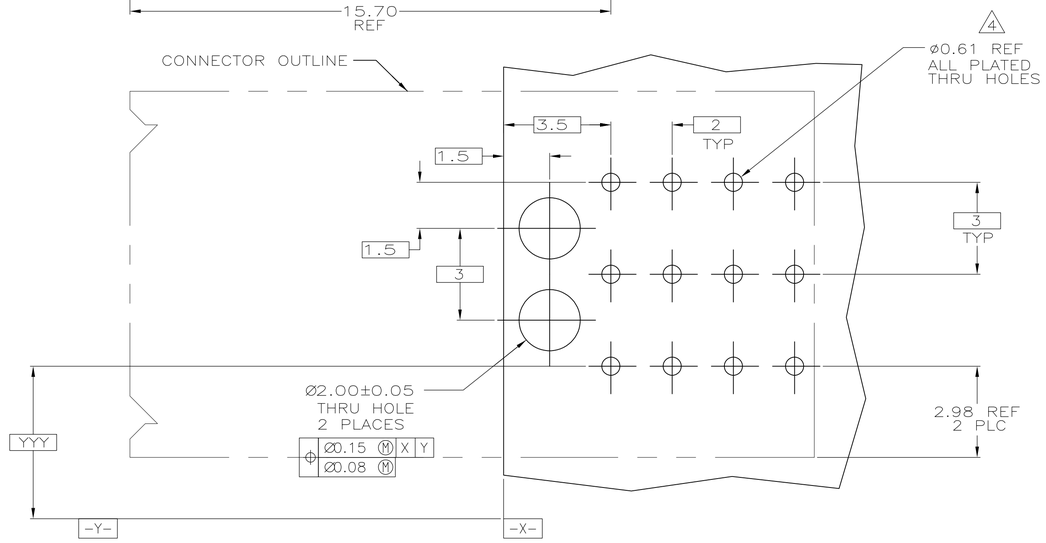


RECOMMENDED PCB HOLE LAYOUT

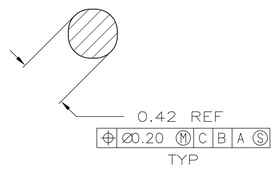


SECTION W-W
SCALE 40:1

5223980-1
PART NUMBER

| | | | |
|---|---|---|---|
| THIS DRAWING IS A CONTROLLED DOCUMENT. | DWN R.CARBO 13DEC04 | Tyco Electronics | Tyco Electronics Corporation Harrisburg, Pa 17105-3608 |
| DIMENSIONS: mm | CHK R.PATTERSON 13DEC04 | | |
| TOLERANCES UNLESS OTHERWISE SPECIFIED: 0 PLC ± - 1 PLC ± - 2 PLC ± 0.13 3 PLC ± - 4 PLC ± - ANGLES ± - | APVD R.PATTERSON 13DEC04 | NAME | ASSEMBLY, RIGHT ANGLE HEADER, W/ RETENTION PEGS, UNIVERSAL POWER MODULE |
| | PRODUCT SPEC — | | |
| | APPLICATION SPEC — | SIZE A1 | CAGE CODE 00779 |
| MATERIAL 1 | FINISH 2 3 | WEIGHT — | DRAWING NO C-5223980 |
| | | | RESTRICTED TO — |
| | | CUSTOMER DRAWING | SCALE 10:1 SHEET 1 OF 1 REV C |