THIS COPY IS PROVIDED ON A RESTRICTED BASIS AND IS NOT TO BE USED IN ANY WAY DETRIMENTAL TO THE INTERESTS OF PANDUIT CORP.

Material	High Conductivity Seamless Copper Tube
Plating	Electro-Tin
Wire Size	300 STR/FLEX
Wire Type	Stranded Copper: Class G, H, I, K, M, Locomotive
Wire Strip Length	1-1/4 in.
Stud Size	5/8 in.
UL Listed Wire Connector	Yes, for applications up to 35kv. Consult cable manufacturer for voltage stress relief instructions with applications greater than 2000 volts.
UL Temperature Rating	90° C
C.S.A Certified Wire Connector	Yes
Panduit Color Code on Barrel	RED
Panduit Die Index No. on Barrel	P71
Alternate Industry Die Index No. ( ) on Barrel	(18)

CERTIFIED

LISTED
Wire Connector

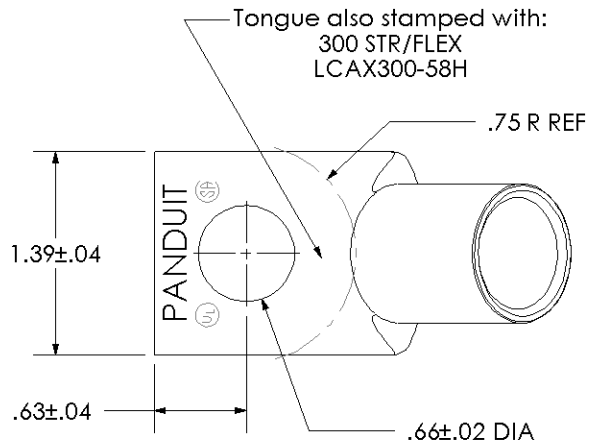

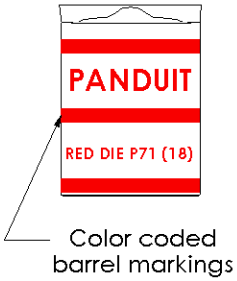

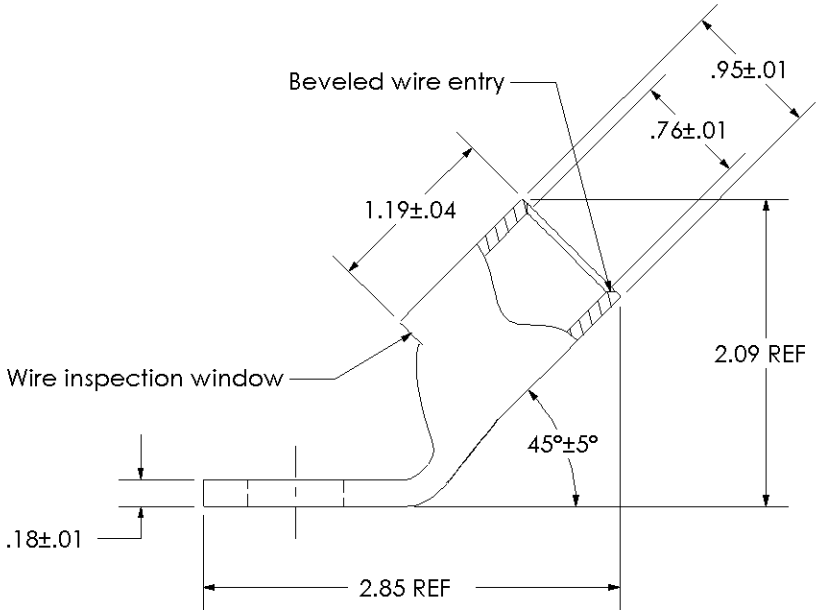

REV	DATE	BY	CHK	DESCRIPTION	ECN
00	6/03	CJW	SAC	RELEASED	10850

PANDUIT CORP. TINLEY PARK, ILLINOIS

LCAX300-58H-6
Copper Lug - One-Hole, Standard Flex Barrel, 45° Angle Tongue

SCALE N/A

DRAWING NO / CAD FILE LCAX300-58H-CUST