MICRO SWITCH
FED. MFR. CODE 91929

ASSEMBLY- TOGGLE SWITCH

CATALOG LISTING
115AT2

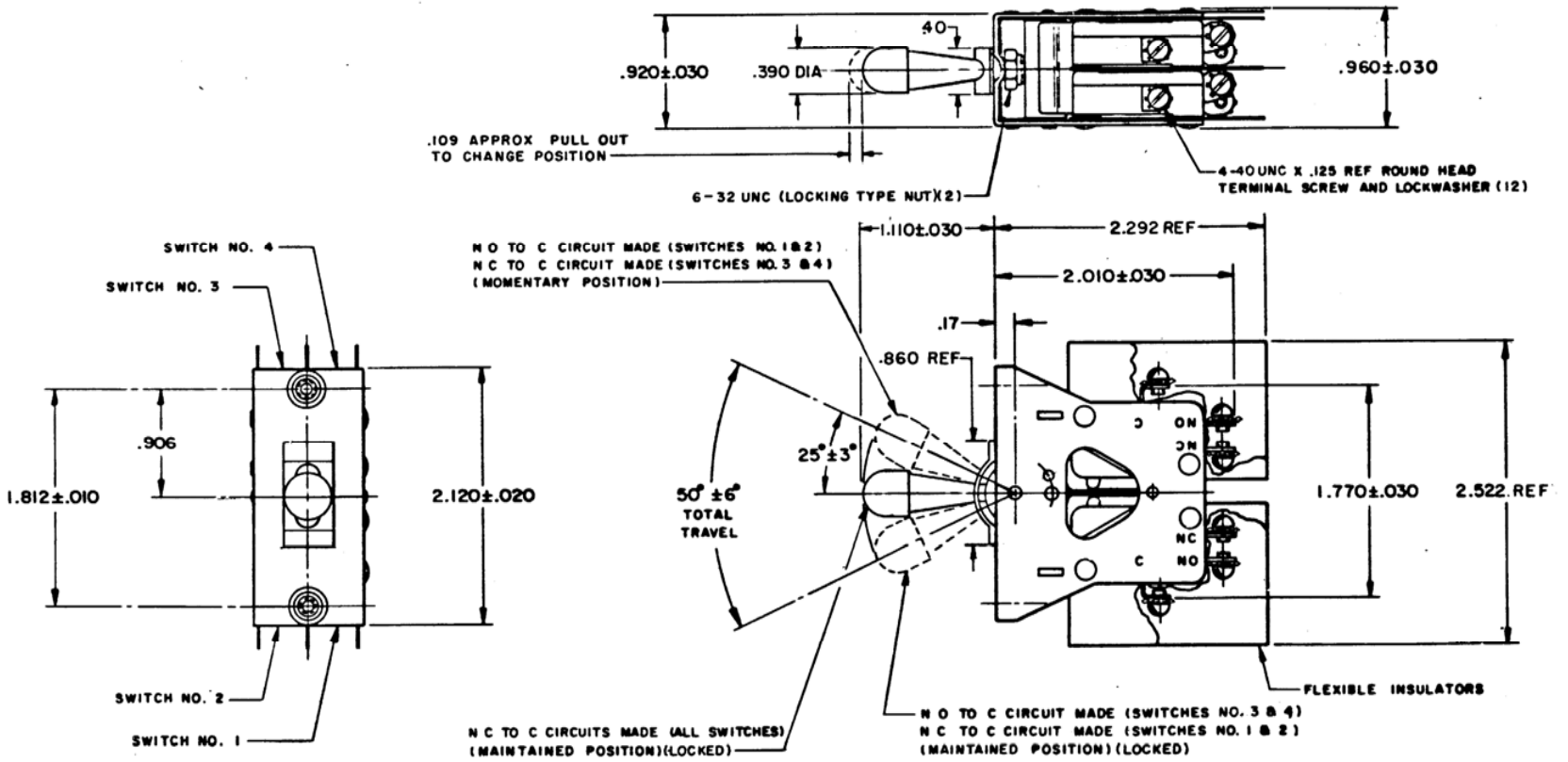

NOTE:
1 - UNIT INCLUDES CAT. LIST. V3-201 (4) BASIC SWITCH
2- SWITCHES DO NOT NECESSARILY OPERATE SIMULTANEOUSLY

THIS DRAWING COVERS A PROPRIETARY ITEM AND IS THE PROPERTY OF MICRO SWITCH, A DIVISION OF MINNEAPOLIS-HONEYWELL REGULATOR CO. THIS DRAWING IS NOT TO BE COPIED OR USED WITHOUT THE APPROVAL OF MICRO SWITCH.

CHARACTERISTICS	ELECTRICAL DATA	SCALE FULL
	CONTACT ARRANGEMENT S P D T (4)	DO NOT SCALE PRINT
	15A-1/3 HP-125 OR 250 VAC 1/2 A-125 VDC; 1/4 A-250 VDC	UNLESS OTHERWISE SPECIFIED DIMENSIONS ARE IN INCHES TOLERANCES ARE: ONE PLACE (.0) ±.000 TWO PLACE (.00) ±.010 THREE PLACE (.000) ±.005 ANGLES ± WEIGHT

REPLACES
RELEASE NO. PR-5681
NUMBER 115AT2
CHECK
IONS
-5681
W
R 76
4181
S M
N 94
CHECK
4 MARCH 76
C E B
CHECK
3 MARCH 76
DRAWN
K S W