NOTES:
1. MATERIALS AND FINISHES(PLATING THICKNESS IN MICRO-INCHES):
   BODY : STAINLESS STEEL, GOLD PLATING
   CONTACT : BERYLLIUM COPPER, GOLD PLATING
   INSULATOR : PTFE, NATURAL
2. ELECTRICAL:
   A. IMPEDANCE: 50 Ohm
   B. FREQUENCY:DC TO 12 GHz.
   C. DIELECTRIC WITHSTANDING VOLTAGE: 1000 VRMS, MIN.
3. MECHANICAL:
   A. DURABILITY:500 CYCLES MIN.
   B. TEMPERATURE RANGE: - 65 ° C to +165 ° C
4. CRIMP FERRULE
   HEX CRIMP SIZE .213" HEX.
5. CONTACT PIN TO SOLDER

THIRD ANGLE PROJ.

REVISIONS

REV	DESCRIPTION	DATE	ECO	APPR
A	RELEASE TO MFG.	1/6/93	39277	FSH
B	REDRAWN;ITEM 2 WAS 31-1357-19BD;ITEM 3 WAS 901-6168-2BD;ITEM 4 WAS 901-6043-1GA; ITEM 8 WAS 901-6554-BD; ITEM 1 WAS 901-6025-2	2/27/04	44822	CPM
C	CORRECT PLACEMENT OF REF PLANE	11/15/04	45263	CPM
D	SHOW METRIC DIMENSIONS;ADD C.O.D ;RELEASE IN ARFA	05-Dec-13	49795	SH

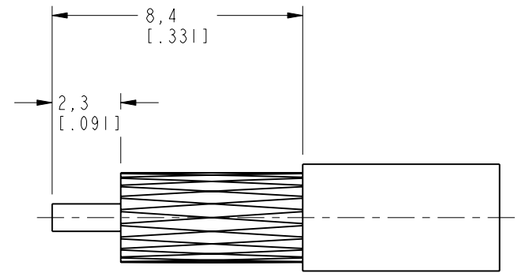

RECOMMENDED CABLE
STRIPPING DIMENSIONS

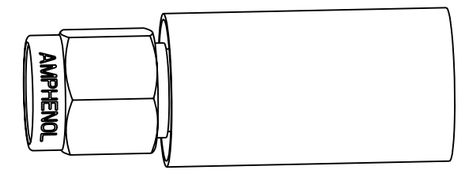

SCALE 2.500

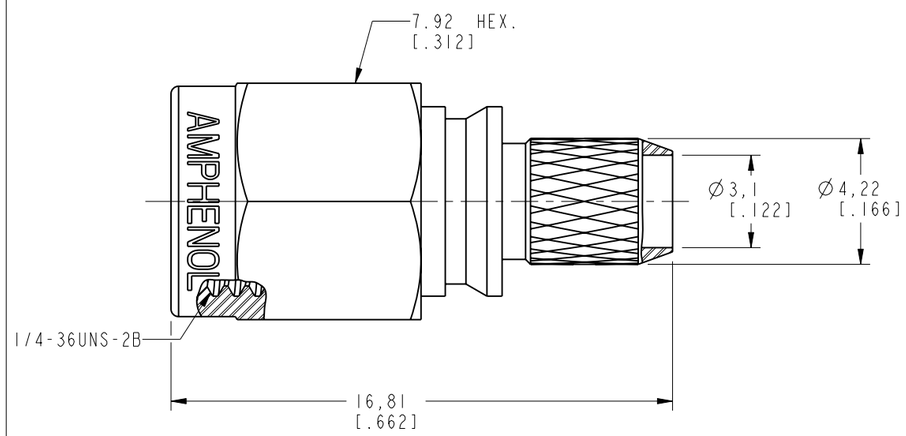

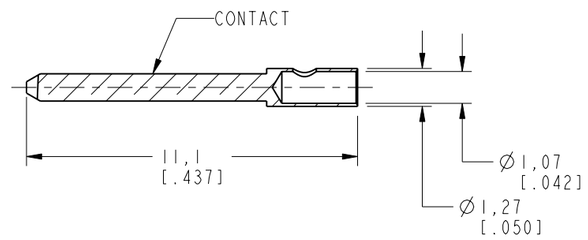

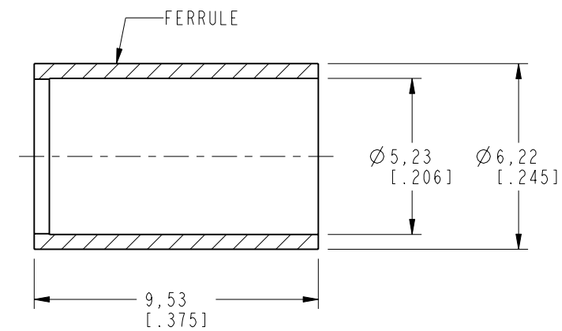

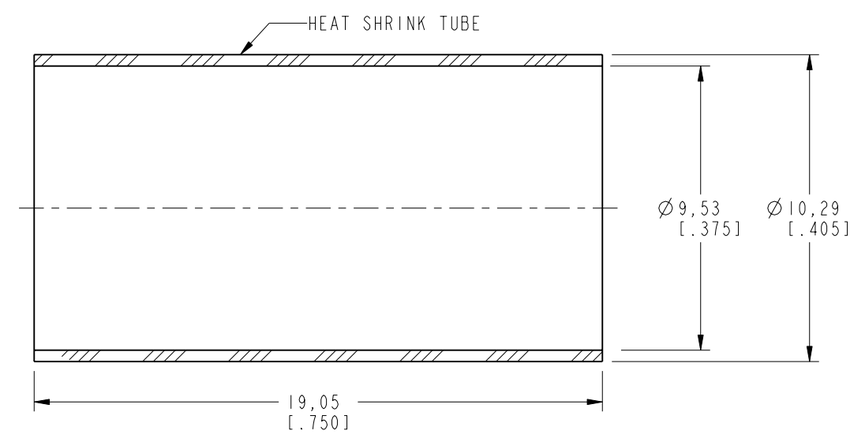

CUSTOMER OUTLINE DRAWING

ALL OTHER SHEETS ARE FOR INTERNAL USE ONLY

UNLESS OTHERWISE SPECIFIED, DIMENSIONS ARE IN METRIC AND TOLERANCES ARE:

<0.5mm	0.5 - 6mm	6 - 30mm	30 - 120mm	ANGLES
± 0.05mm	±0.1mm	±0.2mm	± 0.3mm	±1°

NOTICE - These drawings, specifications, or other data (1) are, and remain the property of Amphenol corp. (2) must be returned upon request; and (3) are confidential and not to be disclosed to any person other than those to whom they are given by Amphenol Corp. the furnishing of these drawings, specifications, or other data by Amphenol Corp., or to any other person to anyone for any purpose is not to be regarded by implication or otherwise in any manner licensing, granting rights to permitting such holder or any other person to manufacture, use or sell any product, process or design, patented or otherwise, that may in any way be related to or disclosed by said drawings, specifications, or other data.

MATERIAL
-

REFERENCE
EAR 963088-0
615X-1137-100
GEN# ASSYM3_SMA

FINISH

DRAWN Z.ZHENG	DATE 03-Dec-13	
ENGINEER F.S. HULL	DATE 4/10/92	
APPROVED R.VACCARO	DATE 12/18/92	
CAD FILE I:\SMA\901-9511-2		

TITLE
CRIMP TYPE SMA
PLUG FOR RG-58,
RG-141, BELDEN
YR20621 CABLES

SCALE: 5.0:1.0 | SHEET 2 OF 2

DWG SIZE B | REV D

Amphenol RF
www.amphenolrf.com

DRAWING NO. 901-9511-2
ITEM NO. 901-9511-2
PART NO. 901-9511-2