THIS DRAWING IS UNPUBLISHED. RELEASED FOR PUBLICATION ,19 .
© COPYRIGHT 19 BY AMP INCORPORATED. ALL RIGHTS RESERVED.

LOC	DIST
CM	53

REVISIONS

P	LTR	DESCRIPTION	DATE	DWN	APVD
	0	RLSD PER PR CM 94-91	08-05-94	BL	RS

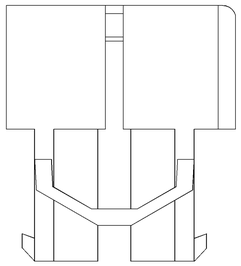

1. TO BE USED WITH DUAL LANCE MATE-N-LOK™ PINS.
2. TO BE USED WITH PLUG 480283.
3. EFFECTIVE PANEL THICKNESS 'E' IS 1.02-2.54 AND IS DEPENDENT ON 'T' AND 'R'.
4. CAP MUST BE INSERTED IN A ROCKING MANNER.
5. THE PANEL MUST BE PUNCHED SO THAT THE HOUSING ENTERS THE PANEL IN THE SAME DIRECTION AS THE PUNCH.
6. PANEL MUST NOT HAVE ANY MATERIAL (PAINT PORCLEAIN,ETC) APPLIED IN THE MOUNTING HOLE AREA THAT WOULD DECREASE RETENTION OF THE HOUSING IN THE PANEL.

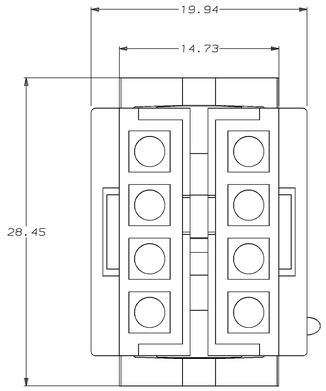

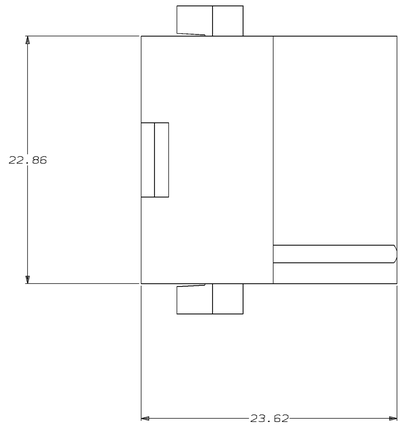

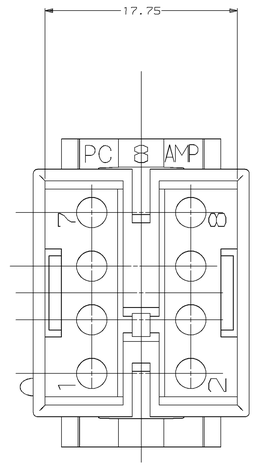

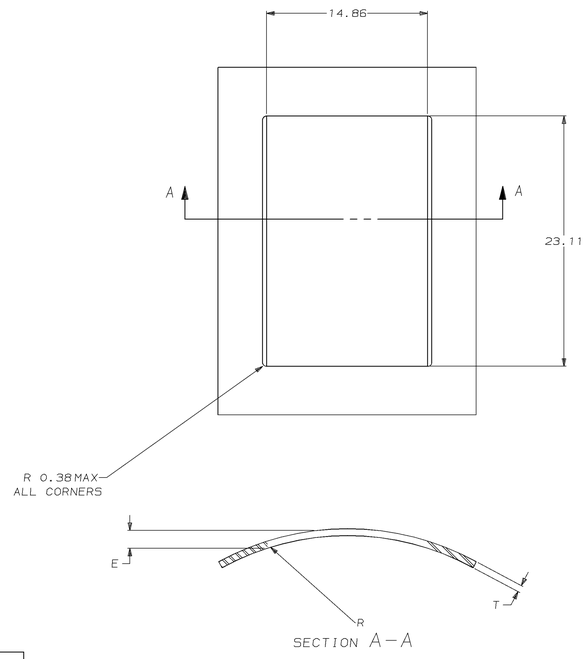

SECTION A–A

RECOMMENDED PANEL MOUNTING BRACKET

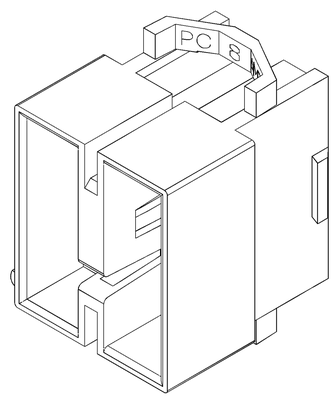

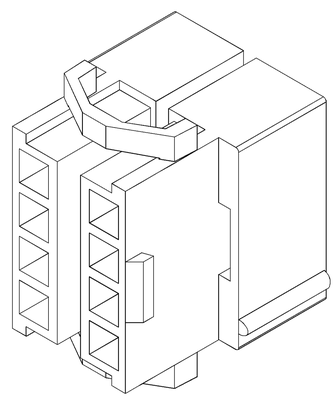

3-DIMENSIONAL MODEL
NTS

17.75	.699	–	–
14.86	.585	28.45	1.120
14.73	.580	23.62	.930
2.54	.100	23.11	.910
1.02	.040	22.86	.900
0.38	.015	19.94	.785
MM	IN	MM	IN

CONVERSION TABLE

AMP 480G REV 10/93

794048-1
PART NUMBER

THIS DRAWING IS CONSIDERED VALUABLE FOR AMP INCORPORATED. REPRODUCTION, DISTRIBUTION OR DISCLOSURE TO OTHERS WITHOUT WRITTEN AUTHORIZATION SHALL BE CONTRACTED FOR THE LATEST REVISION.

DIMENSIONS: INCHES

TOLERANCES UNLESS OTHERWISE SPECIFIED:
0 PLC ±–
1 PLC ±–
2 PLC ±–
3 PLC ±.005
4 PLC ±–
ANGLES ±0°30'

MATERIAL –
FINISH –

DWN B. LEWIS 08-05-94
CHK D. SWING 08-05-94
APVD K. MARTIN 8-16-94
PRODUCT SPEC –
APPLICATION SPEC –
WEIGHT –

CUSTOMER DRAWING

AMP Incorporated
Harrisburg, PA 17105-3608

NAME 8 CIRCUIT CAP MATE-N-LOK™

SIZE	CAGE CODE	DRAWING NO
A0	00779	C-794048

SCALE	SHEET	OF	REV
5:1	1	1	0

METRIC