PRODUCT NO.
SEE TABLE

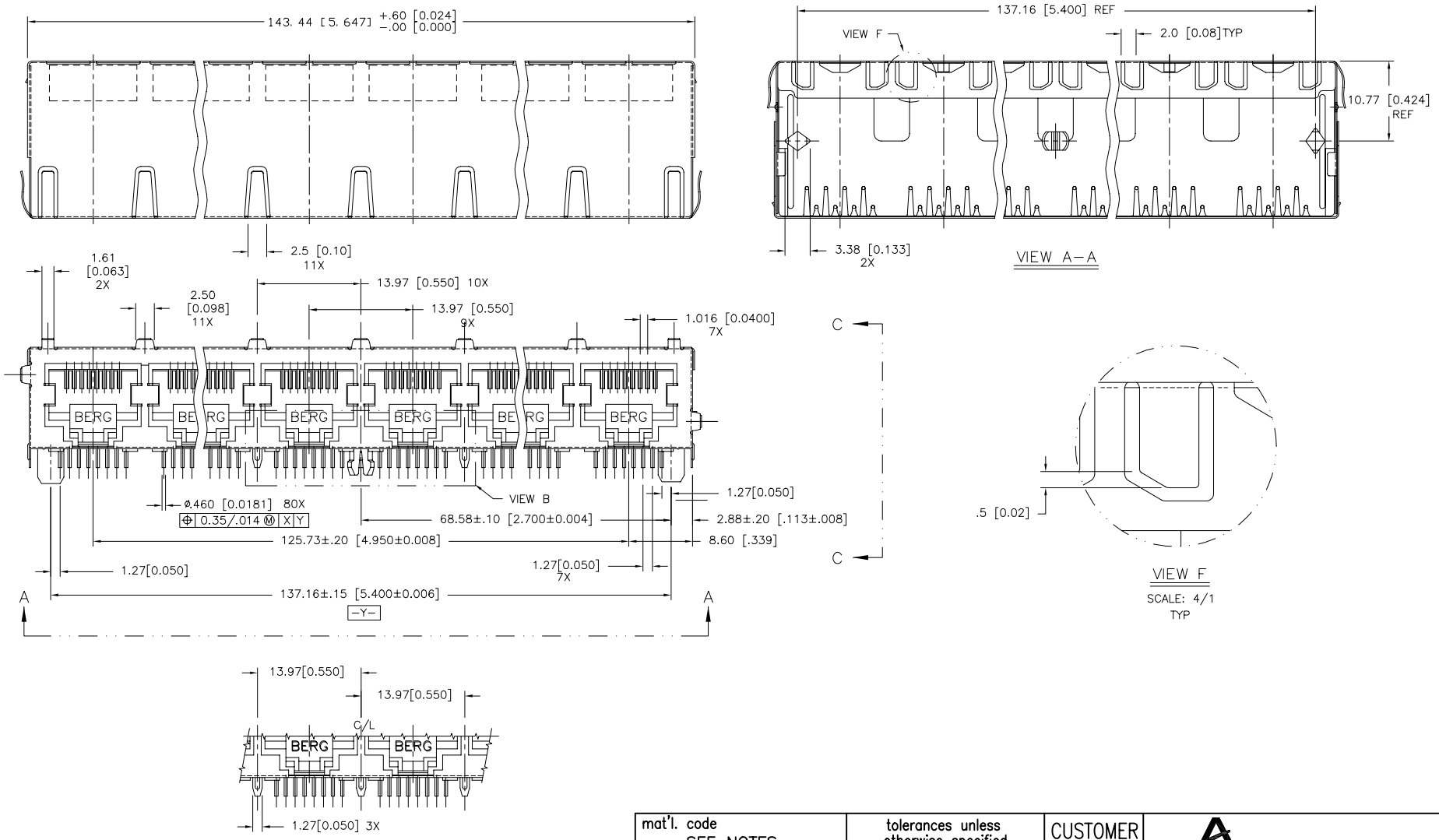

mat'l. code SEE NOTES				tolerances unless otherwise specified				CUSTOMER COPY	FCI www.fciconnect.com
ltr	ecn no	dr	date		.X ±.3				
A	V03-0446	LP	4/17/03	linear	.XX ±.10			projection	title RJ45 R/A 10 PORT GANG JACK FILTER ASSY 8 POS SHIELDED DIAMOND PEG
B	M05-0066	MHT	4/7/05		.XXX ±.050				
				angles	0° ±2°				
				dr	L.POTTEIGER	4/17/03		MM/INCH	product family MOD JACK / code 213
				engr	J.KONTOS	4/17/03			size A / dwg no 10027589
				chr	J.KONTOS	4/17/03		scale 1:1	sheet 1 of 4
				appd	J.KONTOS	4/17/03			

sheet index	revision	B	A	B	A																								
	sheet	1	2	3	4																								

cage code 22526

ACAD PDM: Rev:B STATUS: Released Printed: Aug 01, 2010

PRODUCT NO.
SEE TABLE

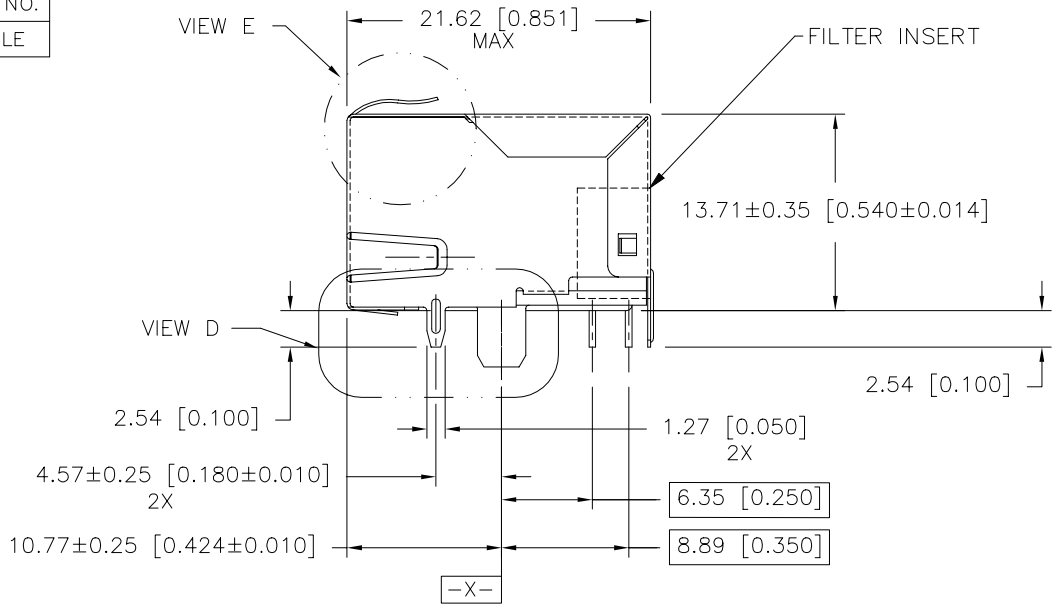

VIEW C–C

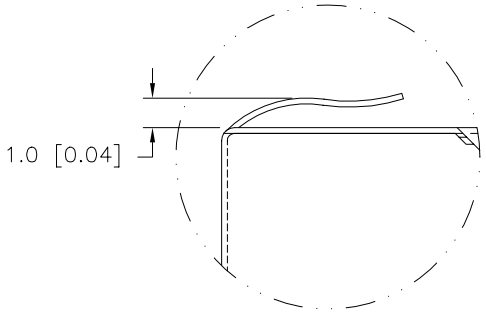

VIEW E

SCALE: 2/1

TYP FOR ALL GROUND SPRINGS

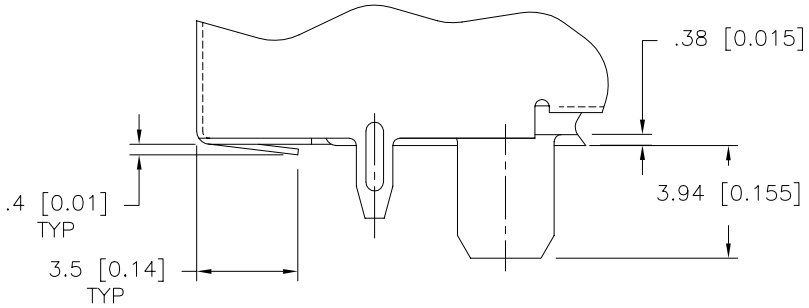

VIEW D

SCALE: 2/1

mat'l. code SEE NOTES				tolerances unless otherwise specified			CUSTOMER COPY	FCI www.fciconnect.com	
ltr	ecn no	dr	date	linear	.X ±.3				
A					.XX ±.10		projection	title RJ45 R/A 10 PORT GANG JACK FILTER ASSY 8 POS SHIELDED DIAMOND PEG	
					.XXX ±.050				
				angles	0° ±2°				
				dr	L.POTTEIGER	4/17/03	MM/INCH	product family MOD JACK	code 213
				engr	J.KONTOS	4/17/03		size A dwg no 10027589	
				chr	J.KONTOS	4/17/03	scale 1:1		sheet 2 of
				appd	J.KONTOS	4/17/03			
sheet index	revision sheet								

cage code 22526

ACAD

PDM: Rev:B

STATUS: Released

Printed: Aug 01, 2010

PRODUCT NO.
10027589–X103LF

PLATING CODE X	PLATING ⑨
0	.76uM/30u" G.X.T.
1	.38uM/15u" GOLD
3	.76uM/30u" GOLD
5	1.27uM/50u" GOLD

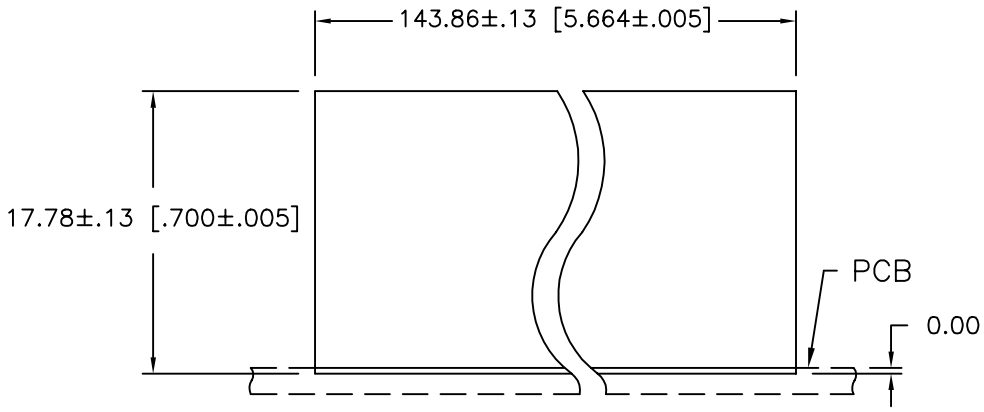

RECOMMENDED PANEL OPENING

NOTES:

1. RECOMMENDED P.C.B. THICKNESS 1.60 [0.063].
2. HOUSING MATERIAL: HIGH TEMPERATURE THERMOPLASTIC, 94–V–0.
3. CONTACTS: PHOS BRONZE ALLOY, ø 0.460 [0.0181] ROUND WIRE, PLATING SEE TABLE.
4. SHIELD MAT'L: TIN PLATED BRASS ALLOY.
5. ALL DIMENSIONS IN MILLIMETERS/INCHES.
6. PART NUMBERS WITH LF IN THE END ARE LEAD FREE.
7. THIS PRODUCT MEETS EUROPEAN UNION DIRECTIVES AN OTHER COUNTRY REGULATION AS DESCRIBED IN GS–22–008.
8. THE HOUSING TEMPERATURE WITHSTAND EXPOSURE TO 260°C PEAK TEMPERATURE FOR 15 SECONDS IN A WAVE SOLDER APPLICATION WITH A 1.5 MM MINIMUM THICK CIRCUIT BOARD. SEE APPLICATION NOTES/PROCEDURES IF THEY ARE AVAILABLE.
9. PLATING OPTION: MAY BE EITHER GOLD OR GXT PLATED AT MANUFACTURER'S OPTION.

mat'l. code SEE NOTES				tolerances unless otherwise specified			CUSTOMER COPY	FCI www.fciconnect.com	
ltr	ecn no	dr	date	linear	.X ±.3				
B					.XX ±.10		projection	title RJ45 R/A 10 PORT GANG JACK FILTER ASSY 8 POS SHIELDED DIAMOND PEG	
					.XXX ±.050				
				angles	0° ±2°				
				dr	L.POTTEIGER	4/17/03	MM/INCH	product family MOD JACK	code 213
				engr	J.KONTOS	4/17/03		size A dwg no 10027589	
				chr	J.KONTOS	4/17/03	scale 1:1		sheet 3 of
				appd	J.KONTOS	4/17/03			
sheet index	revision sheet								

cage code 22526

PRODUCT NO.
SEE TABLE

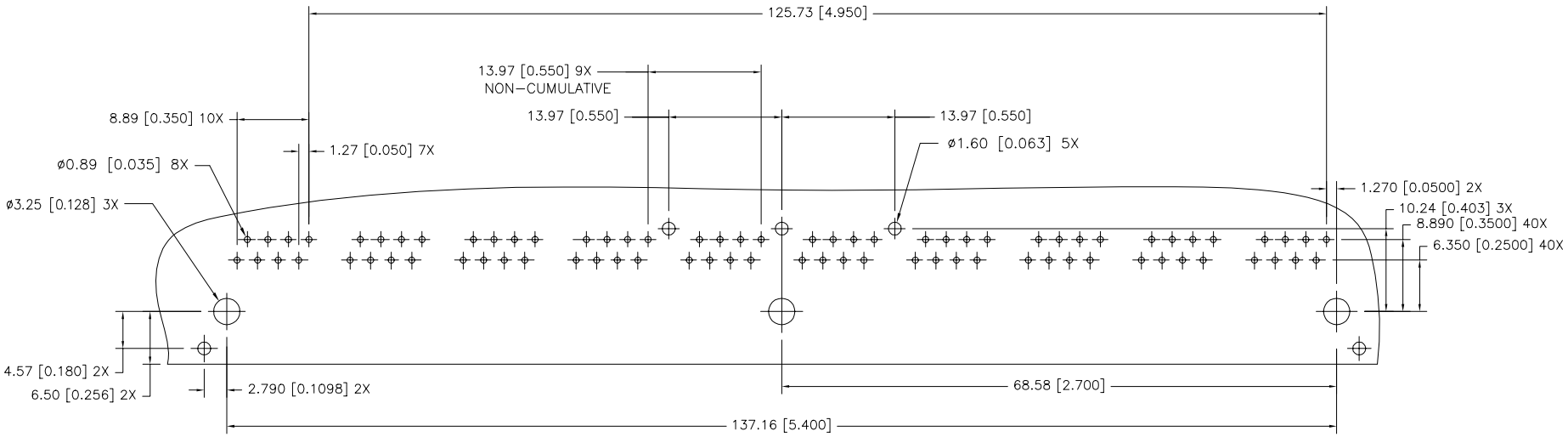

RECOMMENDED P.C.B LAYOUT

AS VIEWED FROM TOP SIDE(COMPONENT SIDE)

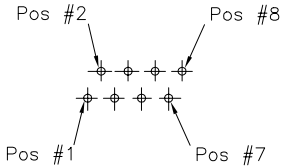

TYPICAL FOR ALL FOOTPRINTS

AS VIEWED FROM TOP SIDE(COMPONENT SIDE)

mat'l. code SEE NOTES				tolerances unless otherwise specified			CUSTOMER COPY	FCI www.fciconnect.com	
ltr	ecn no	dr	date	linear	.X ±.3				
A					.XX ±.10		projection	title RJ45 R/A 10 PORT GANG JACK FILTER ASSY 8 POS SHIELDED DIAMOND PEG	
					.XXX ±.050				
				angles	0° ±2°				
				dr	L.POTTEIGER	4/17/03	MM/INCH	product family MOD JACK	code 213
				engr	J.KONTOS	4/17/03		size A / dwg no 10027589	
				chr	J.KONTOS	4/17/03	scale 1:1		sheet 4 of
				appd	J.KONTOS	4/17/03			
sheet index	revision sheet								

cage code 22526