BUD	PART NAME	PIP SERIES - PC 10% FIBERGLASS BOX	PART No.	PIP-11777 PIP-11777-C	REVISION DATE	12-3-15

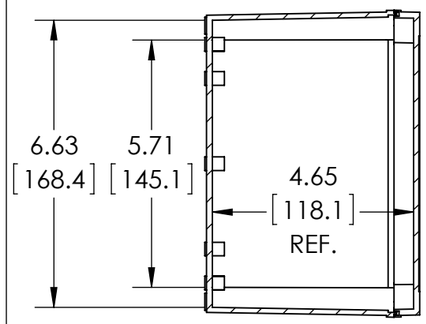

SECTION A-A

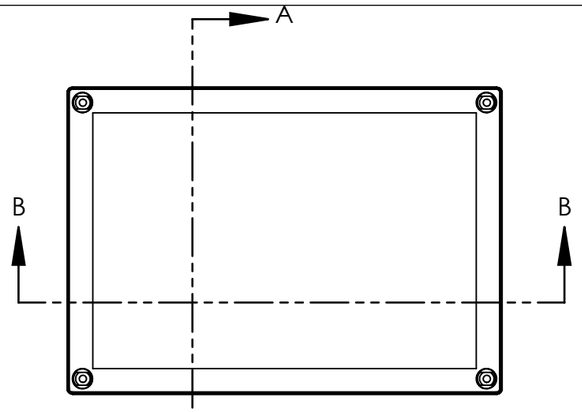

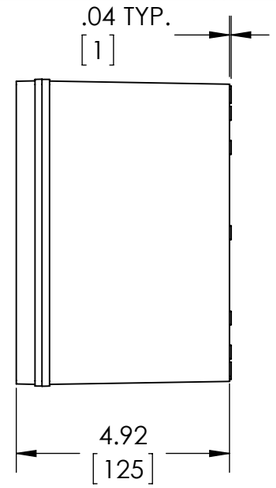

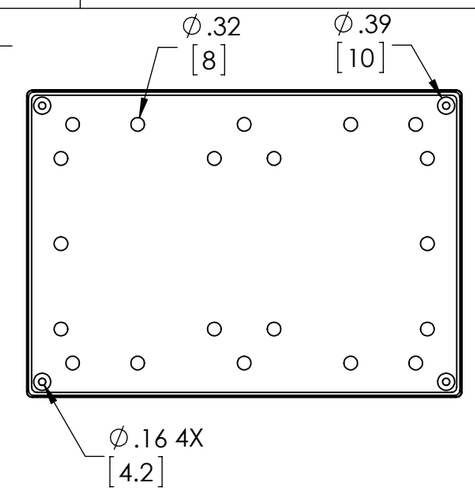

NOTES:
1- MATERIAL: BODY - POLYCARBONATE 10% FIBERGLASS REINFORCED
COVER - POLYCARBONATE
UL508 /NEMA TYPE 4X WITH IP-67 TUV RATING & UL-94V0 RATING
2- FINISH: BODY - LIGHT GRAY
COVER - LIGHT GRAY OR CLEAR (-C)
3- SUPPLIED WITH FOUR NON-METALLIC CAPTIVE SCREWS FOR COVER MOUNTING
4- CONTINUOUS GASKET IN COVER
5- SUPPLIED WITH FOUR M4 x 8mm LG. TRUSS HEAD MACHINE SCREWS
6- DIMENSIONS ARE INCH [MM]
7- DRAWING FOR REFERENCE
8- OPTIONAL ACCESSORIES:
INTERNAL STEEL PANEL - #PIX-11775
MOUNTING BRACKET KIT (STAINLESS STEEL) - #NBX-10922
MOUNTING BRACKET KIT (PLASTIC) - #PIX-4117

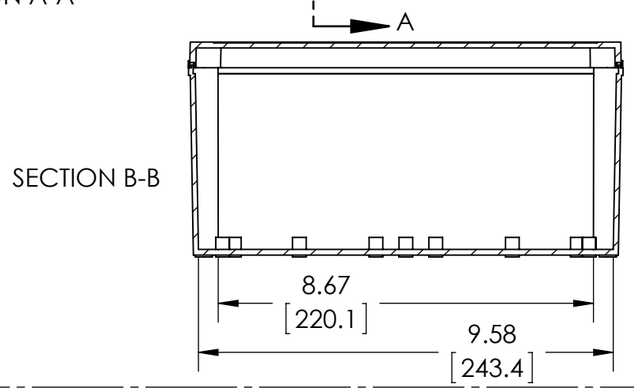

SECTION B-B

ASSEMBLY

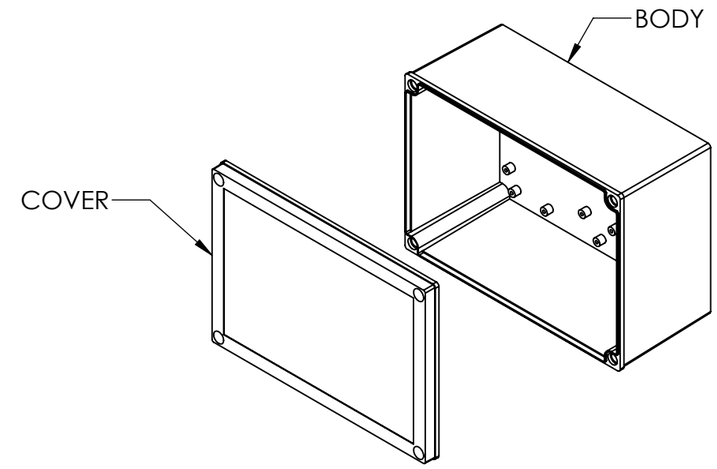

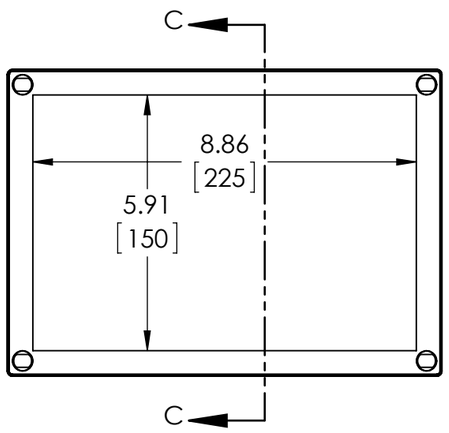

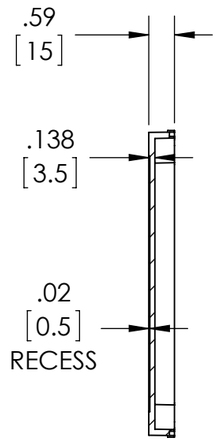

SECTION C-C

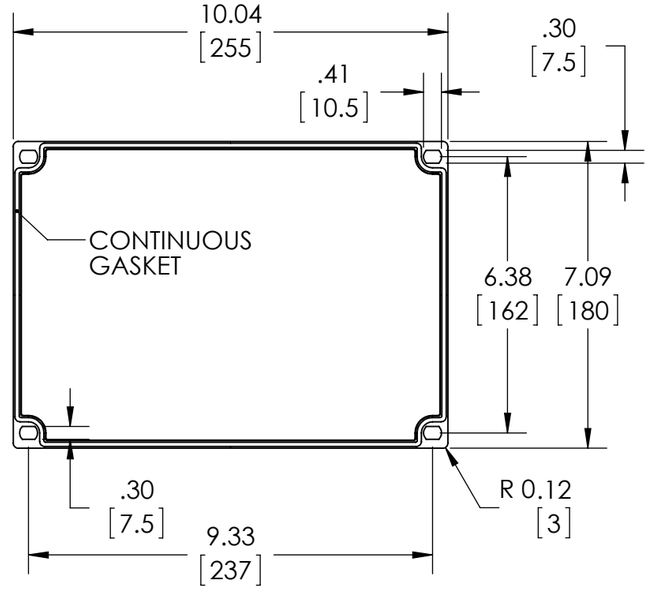

COVER

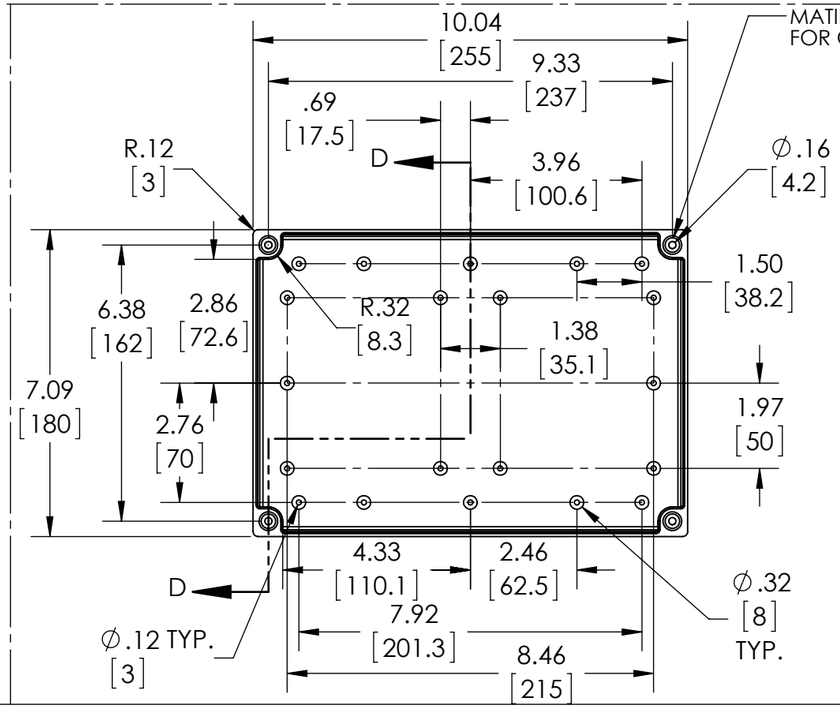

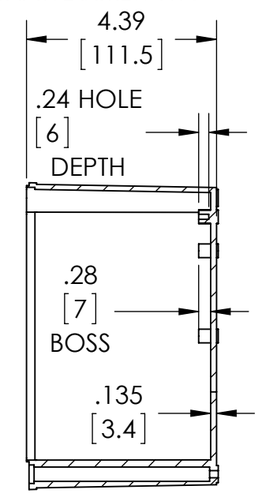

SECTION D-D

BODY