REV.	DESCRIPTION	DATE
A	NEW DRAWING	12/15/2005
B	Added dimensions	4/4/2006
C	housing material change	2/9/2011

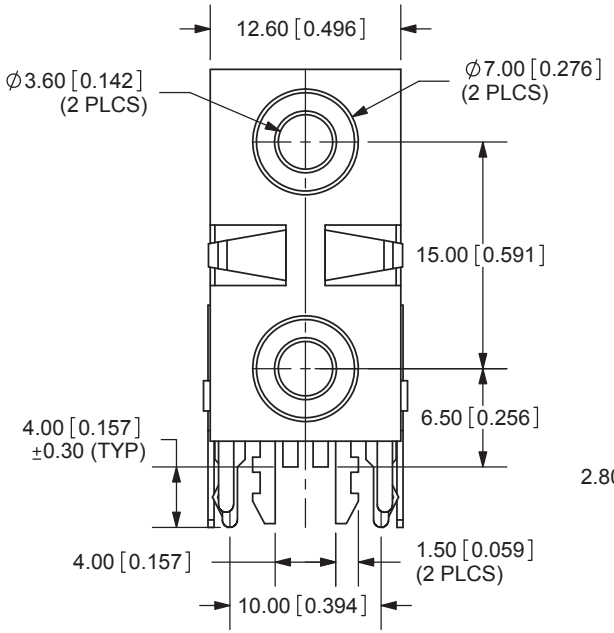

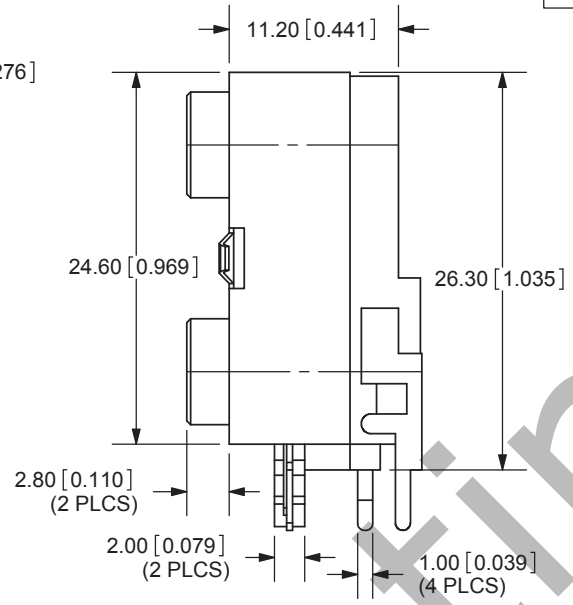

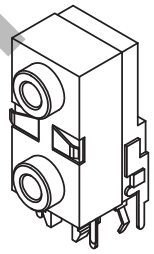

Scale: 1:1

MODEL NO.	SJD-3511-33
SCHEMATIC	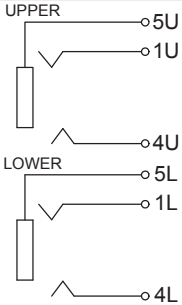

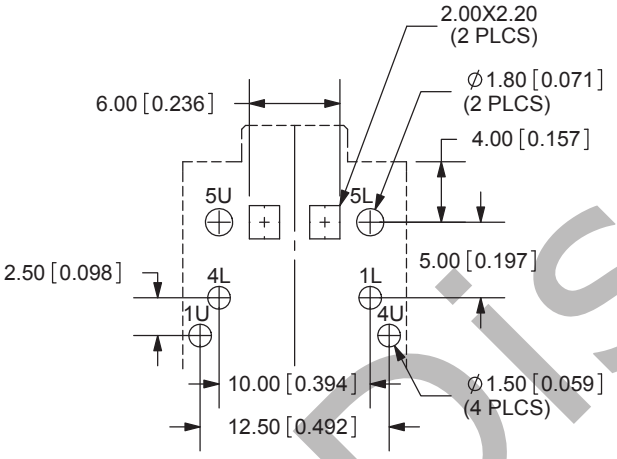

PCB LAYOUT
TOP VIEW

SPECIFICATIONS:
RATING: 16V DC @ 0.3A
CONTACT RESISTANCE: 50m OHMS MAX
INSULATION RESISTANCE: 100M OHMS MIN: 500V DC
VOLTAGE WITHSTAND: 500V AC R.M.S. FOR 1 MINUTE
LIFE: 5,000 CYCLES

TOLERANCE:
X.X ±0.2mm
X.XX ±0.1mm
X.XXX ±0.05mm

RoHS

	MATERIAL	PLATING
TERMINAL 1U	Brass	Tin
TERMINAL 4U	Brass	Tin
TERMINAL 5U	PBS	Tin
TERMINAL 1L	PBS	Tin
TERMINAL 4L	PBS	Tin
TERMINAL 5L	PBS	Tin
FRONT SHIELD	Brass	Tin
COVER	PBT HF + PA46 HF	
HOUSING	NY66	

CUI INC
20050 SW 112th Ave.
Tualatin, OR 97062
Phone: 503-612-2300
800-275-4899
Fax: 503-612-2383
Website: www.cui.com

TITLE: DUAL STACK 3.5mm STEREO JACK w/ FNT SHLD
REV: C
PART NO. SJD-3511-33
UNITS: MM [INCHES]
DRAWN BY: ZRJ
APPROVED BY:
SCALE: 2:1
PC FILE NAME: SJD-3511-33

COPYRIGHT 2011 BY CUI INC.

Discontinued