THIS DRAWING IS UNPUBLISHED. RELEASED FOR PUBLICATION -.- .
© COPYRIGHT - BY TYCO ELECTRONICS CORPORATION. ALL RIGHTS RESERVED.

LOC	DIST
GP	00

REVISIONS

P	LTR	DESCRIPTION	DATE	DWN	APVD
	O	RELEASED PER EC 0S13-0440-04	12-07-04	GA	JG

1. HOUSING AND TINE PLATE: POLYESTER, NATURAL.
   CONTACTS: PHOSPHOR BRONZE.
   SHELL: CARBON STEEL.
   RCPT G-PLATE: STAINLESS STEEL.
   RETENTION LEG: BRASS.
2. SHELL: 3.00µm MIN NICKEL OVER 1.30µm MIN COPPER.
   RETENTION LEG: 2.00µm MIN TIN OVER 1.00µm MIN NICKEL.
   CONTACTS: 0.76µm MIN GOLD FOR A LENGTH OF 0.90 MIN FROM MATING END,
   2.54 MIN TIN FOR A LENGTH OF 2.70 MIN FROM OPPOSITE END,
   BOTH OVER 1.27µm MIN NICKEL.
3. CONTACTS 101,102,149,150,151,152,199, AND 200 ARE SEQUENCED TOWARD MATING FACE AS SHOWN, ALL OTHERS ARE SEQUENCED IN A STAGGERED PATTERN.
4. DATUMS AND BASIC DIMENSIONS ESTABLISHED BY CUSTOMER.
5. DATE CODE MAY BE MARKED ON EITHER END.

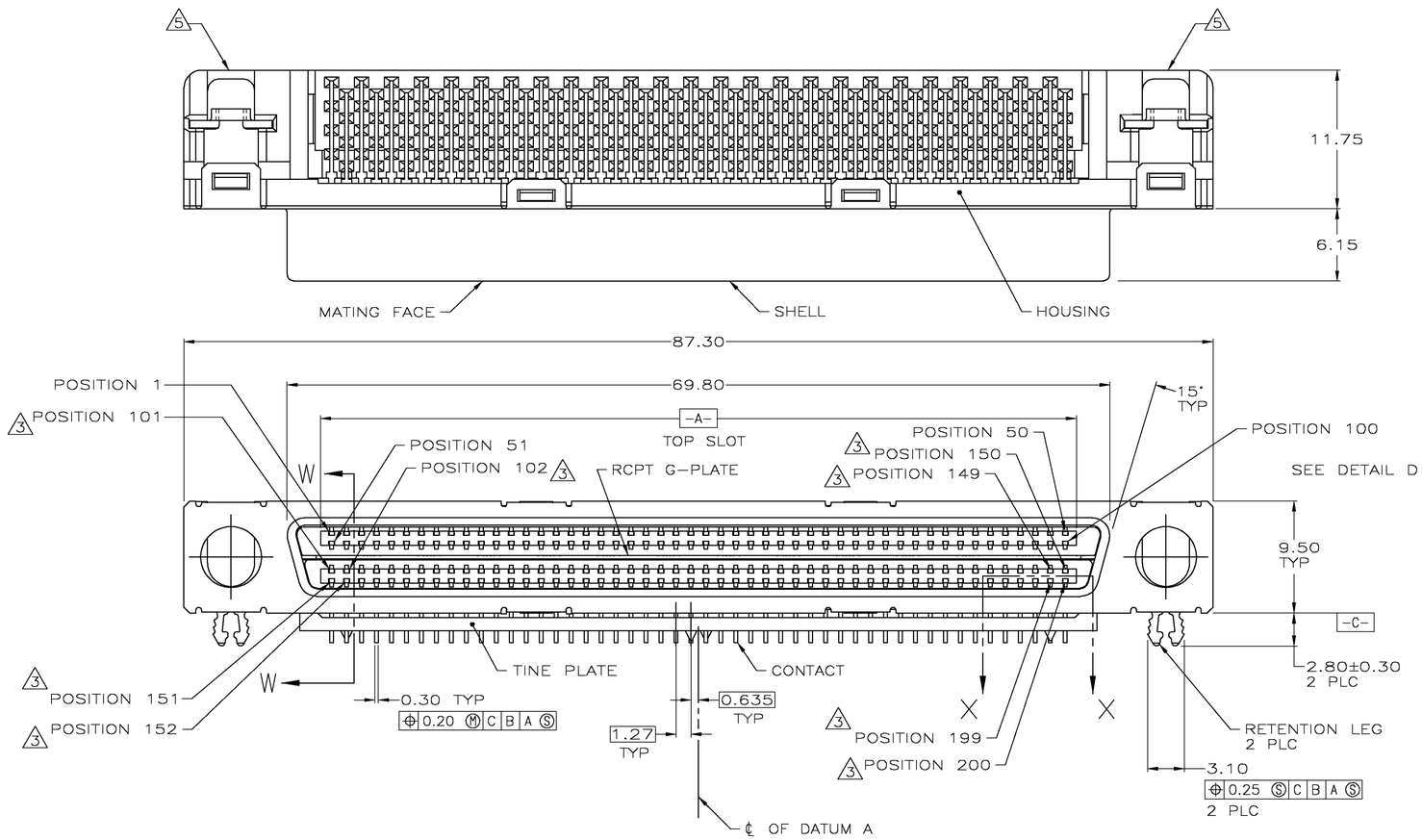

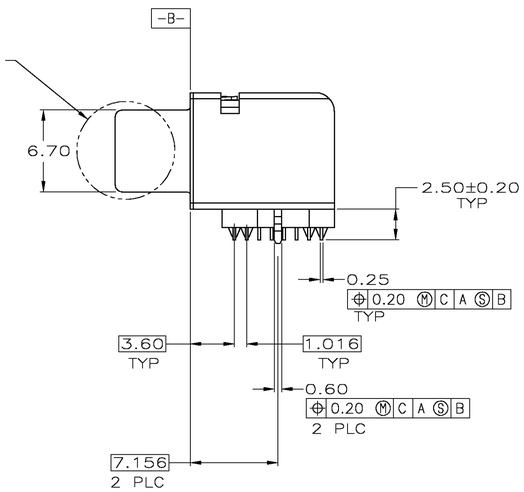

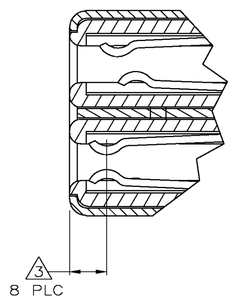

DETAIL D
SCALE 10:1

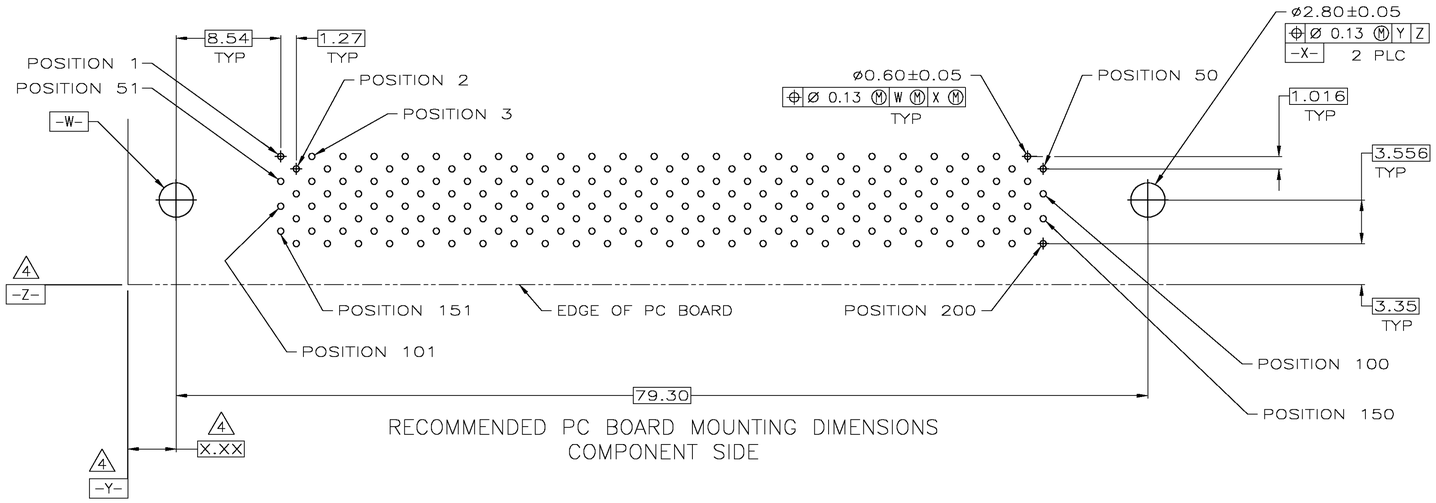

RECOMMENDED PC BOARD MOUNTING DIMENSIONS
COMPONENT SIDE

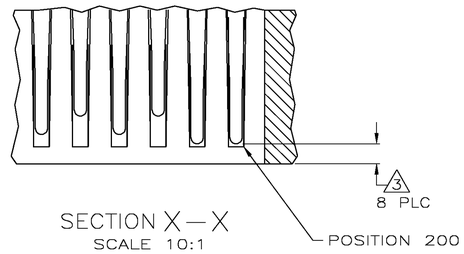

SECTION X-X
SCALE 10:1

5788450-1

PART NUMBER

COPYRIGHT 2005
TYCO ELECTRONICS CORP
ALL RIGHTS RESERVED

THIS DRAWING IS A CONTROLLED DOCUMENT.

DIMENSIONS: mm

TOLERANCES UNLESS OTHERWISE SPECIFIED:
0 PLC ± -
1 PLC ± -
2 PLC ± 0.25
3 PLC ± -
4 PLC ± -
ANGLES ± 3°

MATERIAL 1
FINISH 2

DWN 12-07-04 C. ATTADIA - DOCX5
CHK 12-07-04 C. ROHDE
APVD 12-07-04 M. WALMSLEY
PRODUCT SPEC —
APPLICATION SPEC —
WEIGHT —

Tyco Electronics Corporation
Harrisburg, PA 17105-3608

NAME RECEPTACLE ASSEMBLY, 200 POSITION, RIGHT ANGLE, .050, CHAMP
—

SIZE	CAGE CODE	DRAWING NO	RESTRICTED TO
A1	00779	C-5788450	—

CUSTOMER DRAWING | SCALE 4:1 | SHEET 1 OF 1 | REV O

AMP 4805 REV 31MAR2000