Alle Rechte vorbehalten/ *All rights reserved*

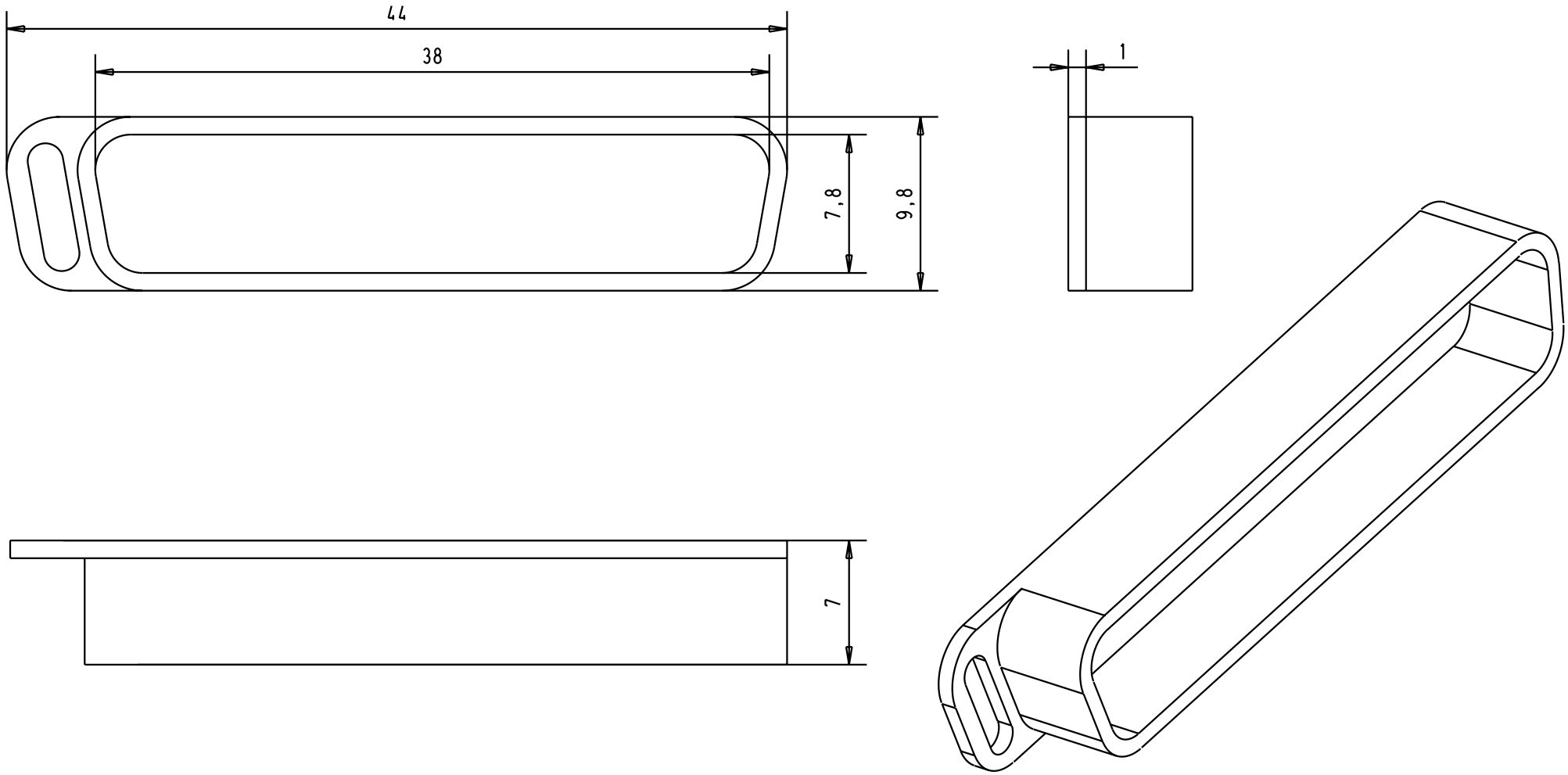


| | | | | | | | | | | | |
|---|---|---|---|---|---|---|---|---|---|---|---|
| | | | | | | | Dat. | Name | | D-Sub, Dust cap, thermoplastic black, for female connector 25 poles | Maßstab/ *Scale* 3:1 |
| | | | | | | Detail. | 09-APR-02 | CV | All Dim. in mm Orig. Size DIN A 4 | | |
| | | | | | | Insp. | | | | | |
| | | | | | | Stand. | | | | | |
| 09 67 025 0711 | | | | | | HARTING EURL F-95972 Paris | | | | TB 09670250711 | Blatt/ *Page* 1 |
| | | | 29768 | 09-APR-02 | CV | | | | | | |
| Part number | | | Mod. | Dat. | Name | | | | | Sub. | |