THIS DRAWING IS UNPUBLISHED. RELEASED FOR PUBLICATION -,- .
© COPYRIGHT - By - ALL RIGHTS RESERVED.

LOC	DIST
AF	50

REVISIONS

P	LTR	DESCRIPTION	DATE	DWN	APVD
	H	REVISED PER ECR-12-013459	27NOV2012	KH	PD

1. CONTINUOUS STRIP ON REELS
2. MATING TAB THK TO BE 0.81±0.025 [.032±.001]
3. WIRE SIZE IS #14-#10 AWG.
4. INSULATION RANGE IS 3.81-5.08 [.150-.200] DIA.

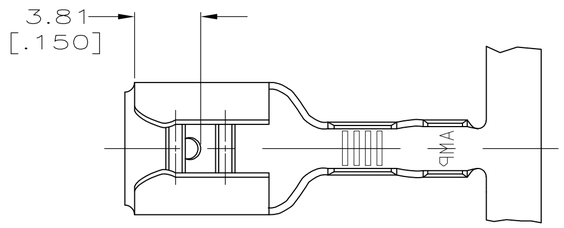

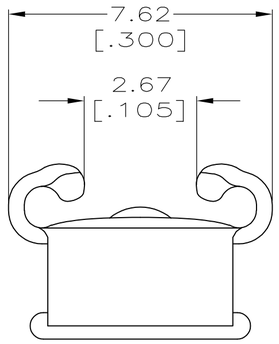

VIEW A-A
SCALE 8:1

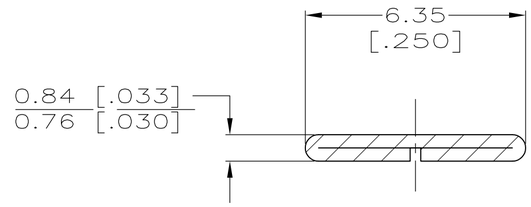

SECTION B-B
SCALE 8:1

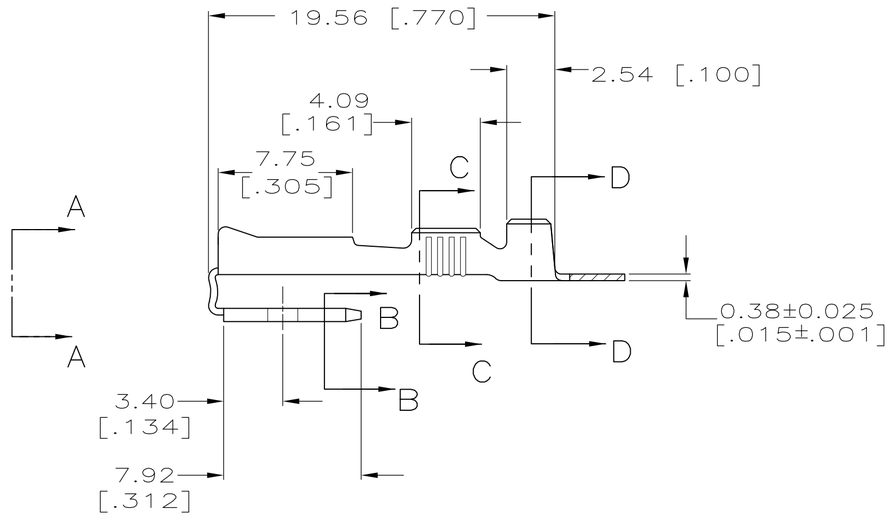

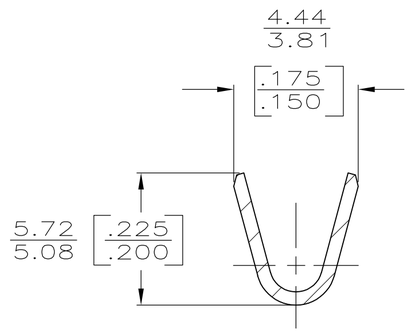

SECTION C-C
SCALE 8:1

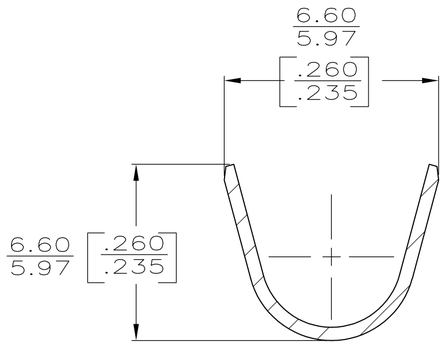

SECTION D-D
SCALE 8:1

FINISH	MATERIAL	PART NO
TIN	BRASS	62253-2
-	BRASS	62253-1

THIS DRAWING IS A CONTROLLED DOCUMENT.

DIMENSIONS: mm [INCHES]

TOLERANCES UNLESS OTHERWISE SPECIFIED:
0 PLC ± -
1 PLC ± -
2 PLC ± -
3 PLC ± 0.38 [.015]
4 PLC ± -
ANGLES ± -

MATERIAL: SEE TABLE
FINISH: SEE TABLE

DWN JR RUTH 7/12/89
CHK MS FEHER 7/12/89
APVD C MEYERS 7/12/89
PRODUCT SPEC —
APPLICATION SPEC 114-2082
WEIGHT —

TE Connectivity

NAME: RECEPTACLE, FASTON,™ PIGGYBACK, 6.35 [.250] SERIES

SIZE	CAGE CODE	DRAWING NO	RESTRICTED TO
A2	00779	C-62253	—

CUSTOMER DRAWING | SCALE 4:1 | SHEET 1 OF 1 | REV H

62253

1471-9 (3/11)